CONVERSION KIT INSTRUCTIONS

Conversion of a Durastill Model 30H or 46A to an automatic water fill distiller

(For Qualified service personnel only)

To convert a manual distiller to an automatic water fill distiller an 1/8" pipe tap and tap handle are needed (not included).

Parts List

Qty	Part No.	Description
1	400025	Float Switch Auto Fill
1	450011	Float Switch Mounting Kit
1	400018	Solenoid Inlet Fitting Assy, Brass
1	450041	Solenoid
1	450017	Solenoid Water Fill Tubing Assy
1	450004	Toggle Switch
1	200141	Water Fill Label
1	400047	Water Inlet Fitting Assy
1	146014	Solenoid Shield
1	200125	Fully Ins Solderless Terminal
3	300003	10-32 x 3/8 Bolt
3	300104	10-32 Keps Nut
1	200030	Wire 7 1/2" Ring x Insulated Female
1	200238	Wire 8 7/8" Ring x Piggyback
1	400230	Distiller Installation Kit

Instructions

1. Unplug distiller from electrical outlet. Drain distiller.

2. Remove cover from distiller

3. Remove plug from front upper left corner of the evaporator (see figure)

4. Hand tap plug hole with 1/8" pipe tap.

CAUTION: The metal is very thin. DO NOT over tap. Be sure that tap is straight and does not strip.

5. Install water inlet fitting assembly. Be careful not to strip. Screw in fitting snuggly. Align toward solenoid (see figure). Secure by tightening brass nut against tank wall.

6. Mount the solenoid and the solenoid shield above the solenoid using the 10-32 bolts and nuts. Attach other end of water fill tubing to water inlet fitting installed in 5. Be careful not to strip the threads.

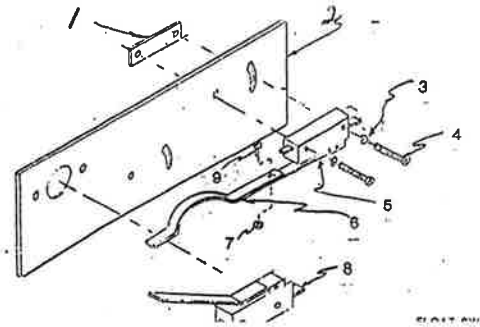

1 NUT PLATE (TAP 6-32)
2 FLOAT SWITCH PLATE
3 WASHER LOCKWASHER NO. 8
4 BOLT PLATED 6-32X1 (MACHINE)
5 FLOAT SWITCH E13-50H
6 FLOAT SWITCH LEVER EXTENSION (SHEET METAL)
7 NUT KEPS PLATED 6-32 (HEX)
8 FLOAT SWITCH E14-50H
9 BOLT PLATED 6-32X1/2 (PAN HEAD)

7. Remove Float switch plate. Mount water fill float switch on float switch plate provided. Mount float switch plate assembly on distiller. Be careful not to catch the blades of the switches on the brass float switch actuator.

8. Remove black hole plug from side of Distiller (this is above the fan toggle switch). Install toggle switch with the wires going up. Install cover plate and knurled nut. Attach water fill label above switch.

9. Wiring. Attach the short black wire from the thermal reset switch to the top most terminal of the float switch installed in 7. Remove the motor lead wire from the thermal reset switch. Install the piggyback/ ring wire from the solenoid coil and the terminal on the thermal reset switch. Connect the short wire from the toggle switch installed in 8 to the other side of the float switch. Connect the long wire of the toggle switch to the solenoid coil (see figure).

Note: One of the solenoid terminals will provide more clearance for the piggyback connector. Also rotation of the terminal may give the best clearance. BE SURE that the wire from the water fill switch is on the opposite solenoid terminal.

Cut and attach the fully insulated female terminal on the end the motor wire and attach it to the piggyback on the solenoid.
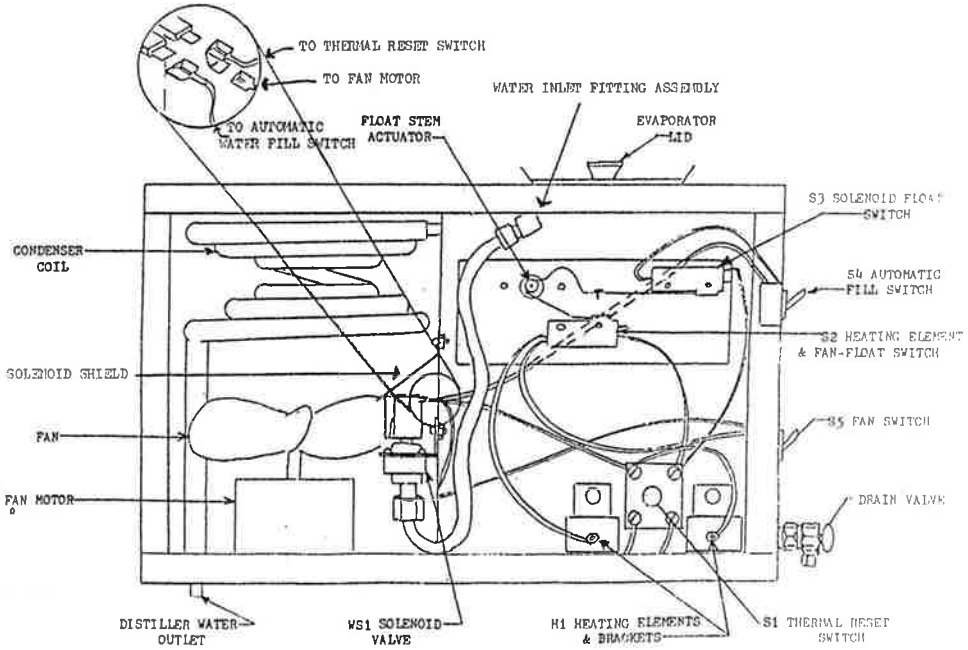
Check wiring for the right connections and clearances. Adjust float switches as per instructions in distiller manual. Run distiller and check for water or steam leaks.